THIS DRAWING AND ITS CONTENTS ARE PROPERTY OF HI-TECH FENCE & STEEL INDUSTRIES. ANY USE ,REPRODUCTION ,DISTRIBUTION OF THE CONTENT ,IN PART OR WHOLE IS STRICTLY PROHBITED WITHOUT THE WRITTEN CONSENT AND APPROVAL OF THE PRINCIPALS OF THE COMPANY.

HCIS CLASS 01

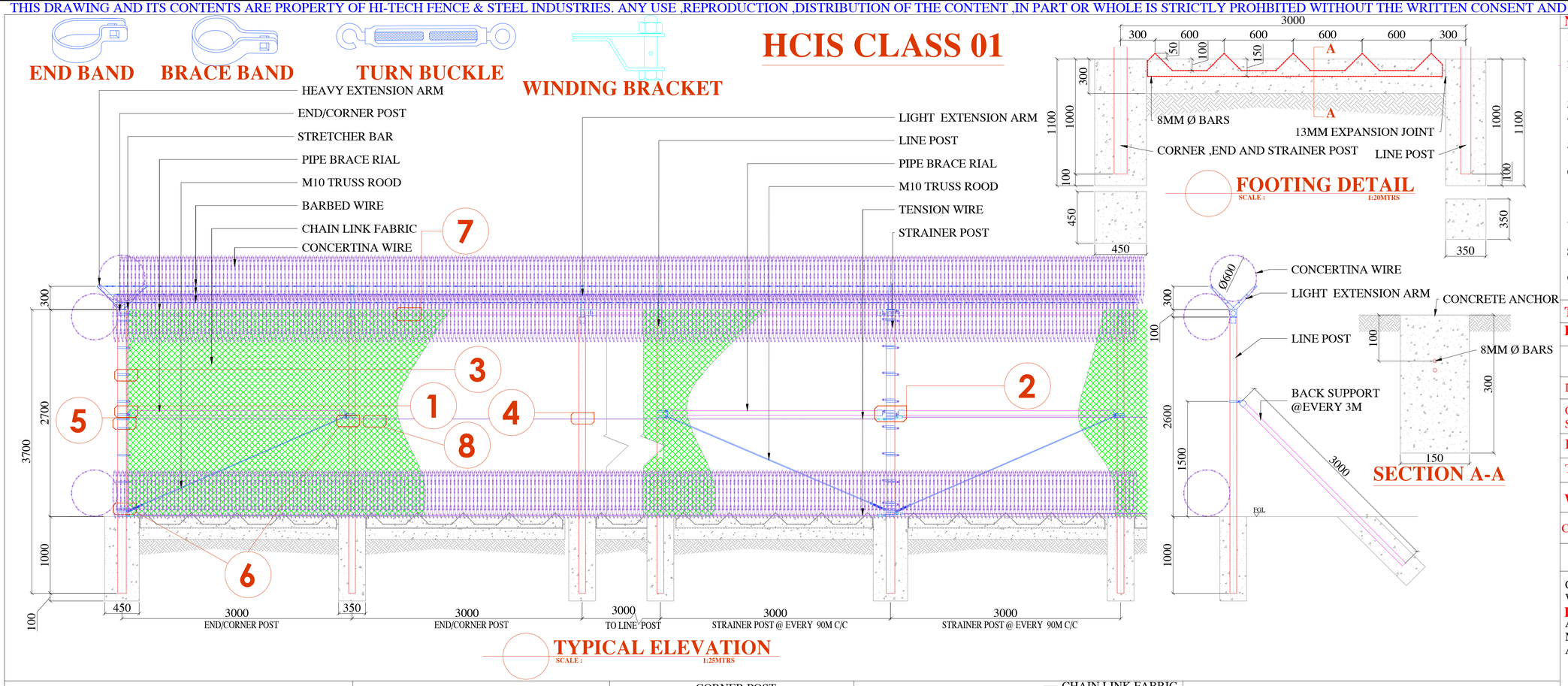

FOOTING DETAIL
SCALE : 1:20MTRS

SECTION A-A

TYPICAL ELEVATION
SCALE : 1:25MTRS

NOTES :

1. ALL DIMENSION ARE IN MILLIMETERS UNLESS OTHERWISE STATED
2. CHAIN LINK 50X50X SHALL BE 4.20/3.76MM AS PER ASTM F668 CLASS 2B (GAUGE 9) CORE DIA WIRE + PVC FUSION BONDED .
3. ALL HARDWARE TO BE GALVANIZED + PVC COATED.
4. TENSION WIRE STIRRUP WIRE & TIE WIRE PVC BONDED.
5. BARBED WIRE ARE GALVANIZED AS PER ASTM A121 - 6 LINES
6. LINE POST, STRAINER POST, CORNER POST & END POST TO BE SCH-80 HOT DIP GALV. INTERNALLY & EXTERNALLY + PVC COATED CONCRETE FOOTINGS AND STEEL ANCHORS ARE SUPPLIED BY OTHERS.
7. BRACE, TOP RAIL & BACKSTAY SCH-40 HOT DIP GALV. INTERNALLY EXTERNALLY + PVC COATED.
8. STRAINER, CORNER, & END POST WILL BE INSTALLED 70MM HIGHER THAN LINE POST TO ALLOW TOP RAIL
9. ALL CONC. FOR FOOTINGS & BEAMS TO BE HAVE MIN.COMP. STRENGTH OF 28MPA @ 28 DAYS

TECHNICAL SPECIFICATION

POST AND PIPES :

ITEM	LENGTH (mm)	PIPE DIA (mm)	THICKNESS (mm)	WEIGHT (KG/m)
LINE POST	3600	88.9	7.62	15.27
CORNER,END & STRAINER POST	3700	114	8.56	22.32
BRACE RAIL	2900	60.3	3.91	5.44
TOP RAIL	6000	60.3	3.91	5.44

WIRE PRODUCTS:

CLASS	CHAIN LINK FABRIC		TENSION WIRE	STIRRUP WIRE	TIE WIRE	BARBED WIRE
	OPENING	WIRE DIA				
	50	3.76/4.20	4.5/4.9 2 ROW	2.5/3.0	1.4/2.0	2.50 6 ROWS

CONCERTINA WIRE CBT-65, Ø2.5MM GALVANIZED CORE WIRE STAINLESS STEEL BLADES 600MM COIL DIA.

FITTINGS

ALL FENCE FITTINGS TO BE HOT DIPPED GALV. AFTER MANUFACTURE IN A ACCORDANCE WITH ASTM A-123 AND A-153. + PVC COATED

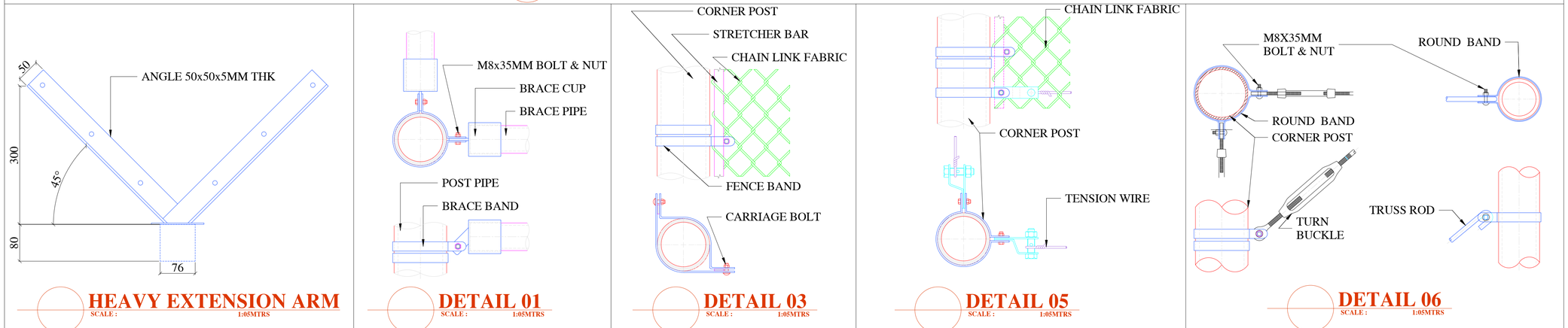

HEAVY EXTENSION ARM
SCALE : 1:05MTRS

DETAIL 01
SCALE : 1:05MTRS

DETAIL 03
SCALE : 1:05MTRS

DETAIL 05
SCALE : 1:05MTRS

DETAIL 06
SCALE : 1:05MTRS

DETAIL 08
SCALE : 1:05MTRS

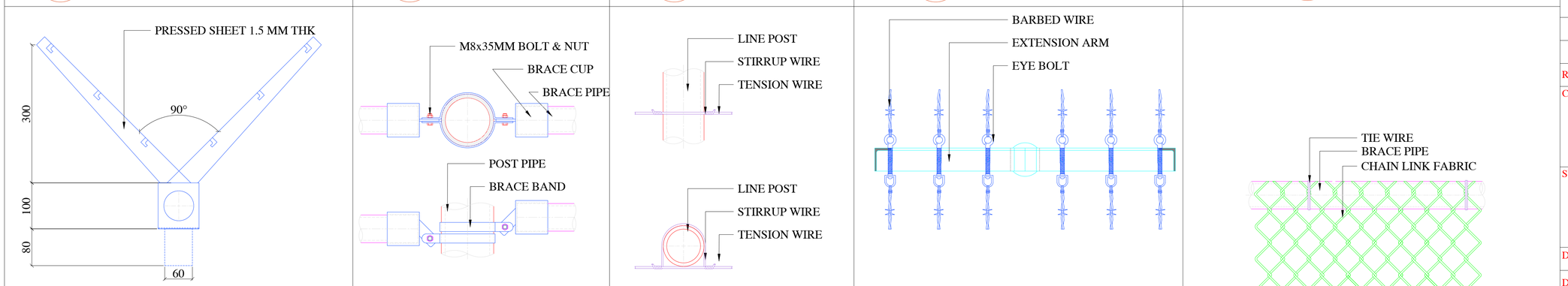

LIGHT EXTENSION ARM
SCALE : 1:05MTRS

DETAIL 02
SCALE : 1:05MTRS

DETAIL 04
SCALE : 1:05MTRS

PLAN VIEW @ CORNER
SCALE : 1:05MTRS

DETAIL 07
SCALE : 1:05MTRS

REV. NO.	DATE	REVISIONS	APPROVALS
A	27-06-2021	FOR APPROVAL	

CLIENT :

SUPPLIER:

HITECH FENCE AND STEEL FACTORY

EXIT 13 AL KHARJ ROAD 2ND INDUSTRIAL AREA RIYADH PO BOX 325752
RIYADH 11371 TEL. NO.: 011 208 007 FAX NO.: 011 291 4419

DESIGNED BY: RAMEEZ	DRAWING TITLE: FENCE ELEVATION & DETAILS	SHEET NO.: 1 OF 1
DRAWN BY: RAMEEZ		SCALE : AS SHOWN
CHECKED BY: ADT	DRAWING NO. : HI-CLF-GEN-HCIS-001-C1	DATE : 27-Jun-21
APPROVED BY: MJI		REV.NO.: A

THIS DRAWING AND ITS CONTENTS ARE PROPERTY OF HI-TECH FENCE & STEEL INDUSTRIES. ANY USE ,REPRODUCTION ,DISTRIBUTION OF THE CONTENT ,IN PART OR WHOLE IS STRICTLY PROHBITED WITHOUT THE WRITTEN CONSENT AND APPROVAL OF THE PRINCIPALS OF THE COMPANY.